KDOT TYPE "B" SPECIAL CURB INLET

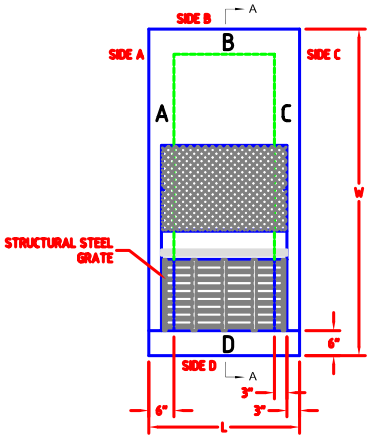

TOP VIEW

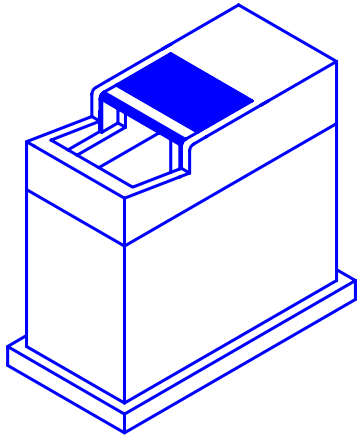

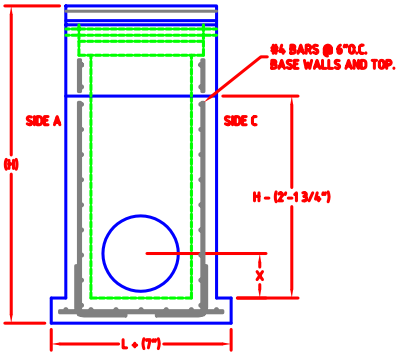

FRONT VIEW

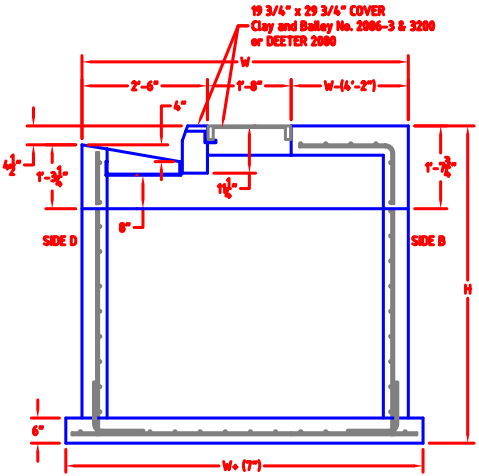

SECTION "A - A"