WICHITA TYPE 2 TRIPLE CURB INLET

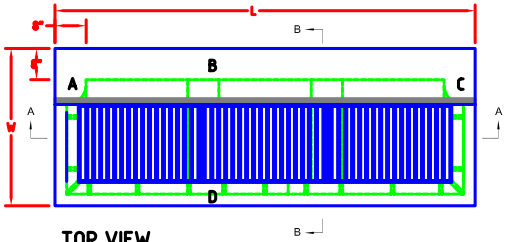

TOP VIEW

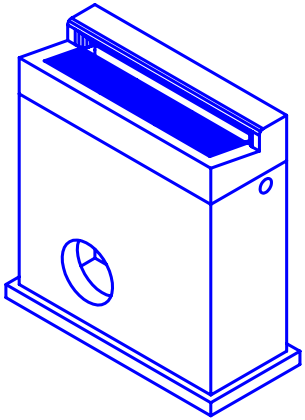

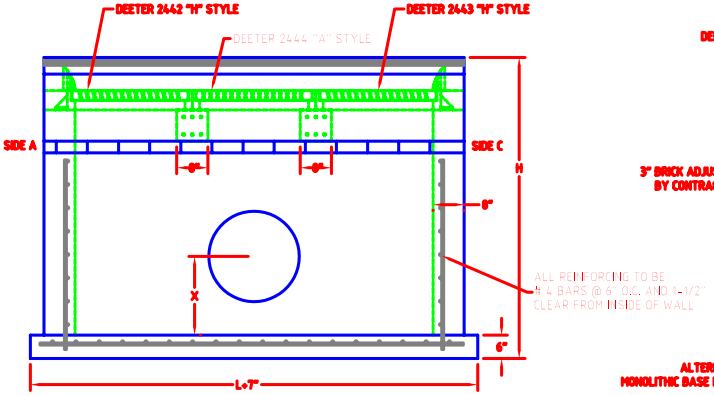

SECTION "A-A"

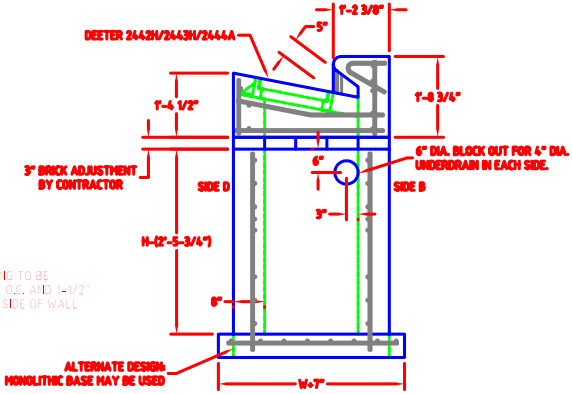

SECTION "B-B"