TYPE A5 CURB INLET

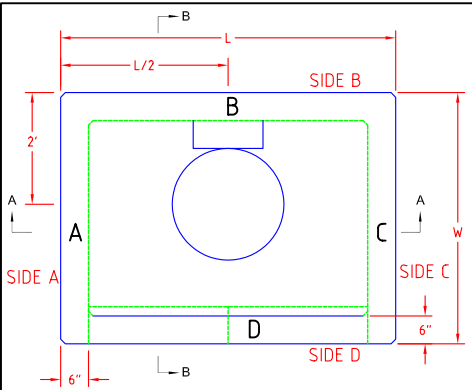

TOP VIEW

"L" VARIES BASED UPON # OF CURB CASTING
(A2.5) L= 3'-6" FOR ONE CURB CASTING
(A5) L= 6'-0" FOR TWO CURB CASTING
(A7.5) L= 8'-6" FOR THREE CURB CASTINGS
(A10) L= 11'-0" FOR FOUR CURB CASTINGS
(A15) L= 15'-0" FOR SIX CURB CASTINGS

CURB CASTING AND VANE GRATE TO BE DEETER 2080 OR EQUAL. RING AND LID TO BE DEETER 2015, GCI KH2301 OR EQUAL.

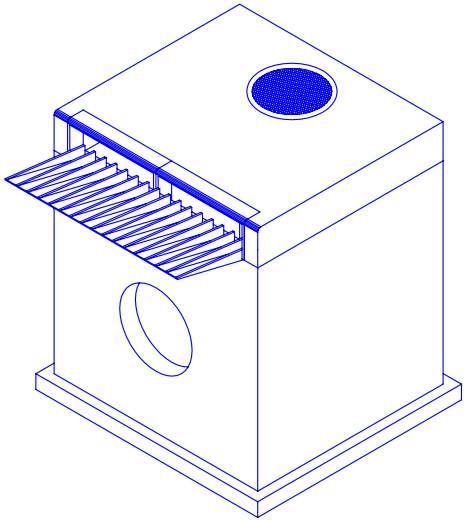

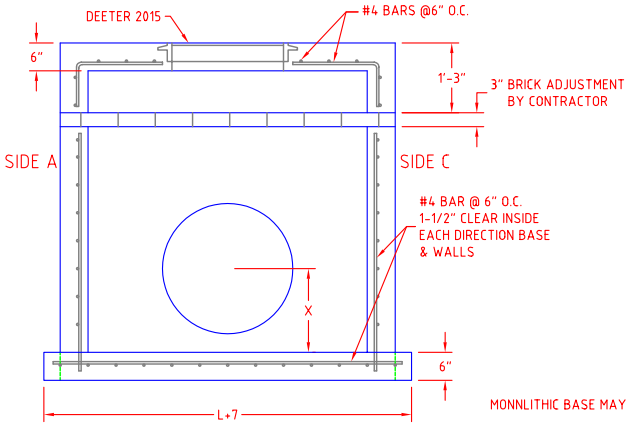

SECTION "A-A"

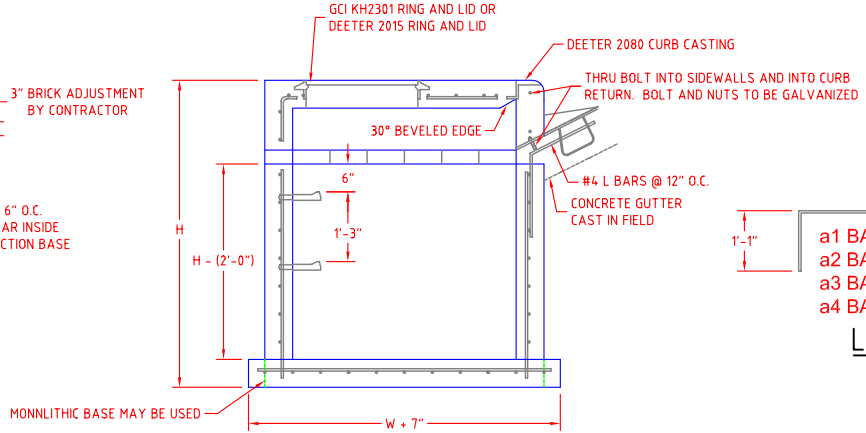

SECTION "B-B"

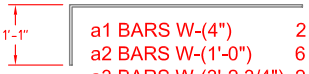

a1 BARS W-(4")	2 ea.
a2 BARS W-(1'-0")	6 ea.
a3 BARS W-(3'-2 3/4")	2 ea.
a4 BARS W-(3'-6 3/8")	2 ea.

L-BARS